3RD ANGLE — DO NOT SCALE — REPORT ANY ERRORS, OMISSIONS TO DRAFTING OFFICE

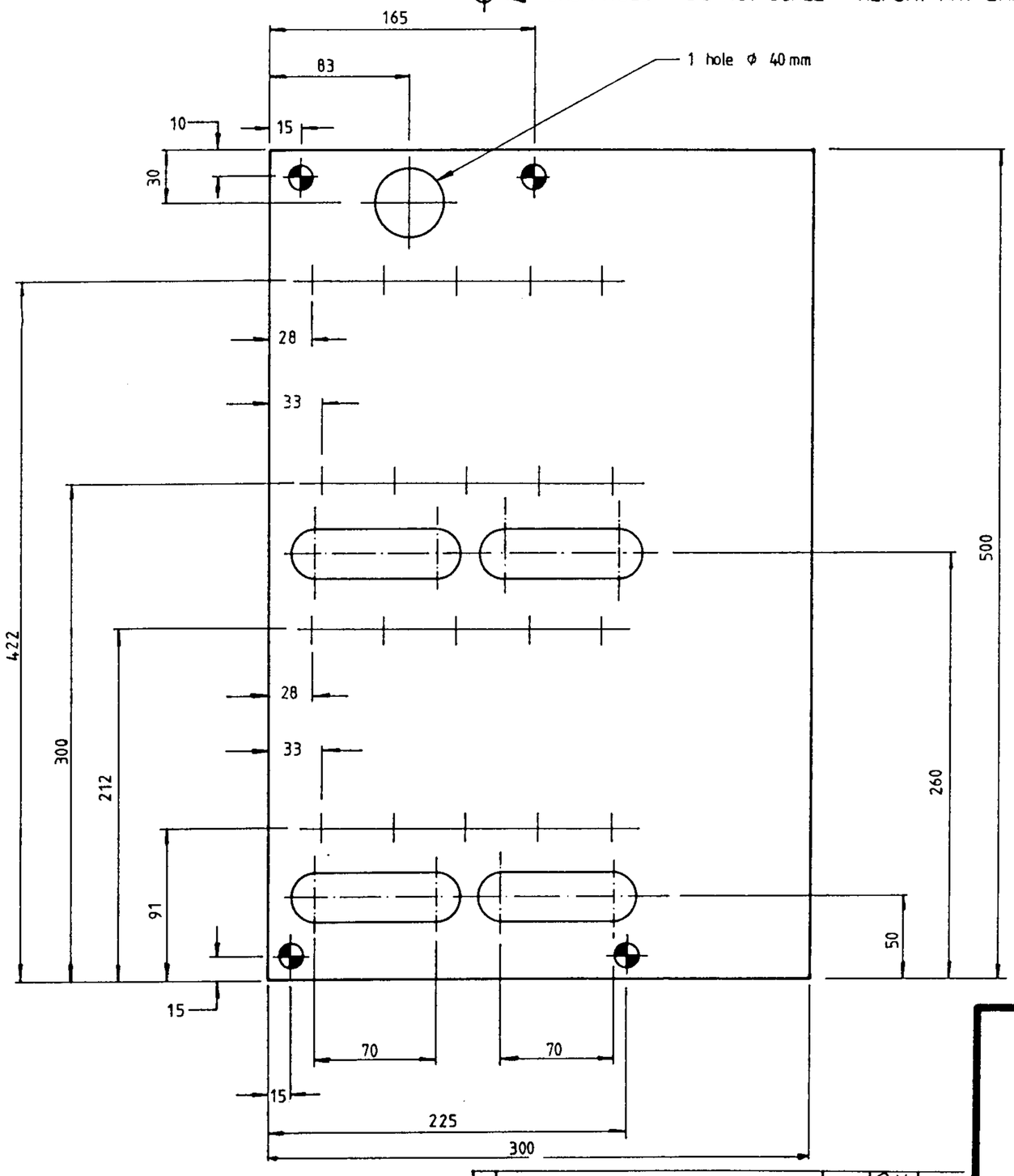

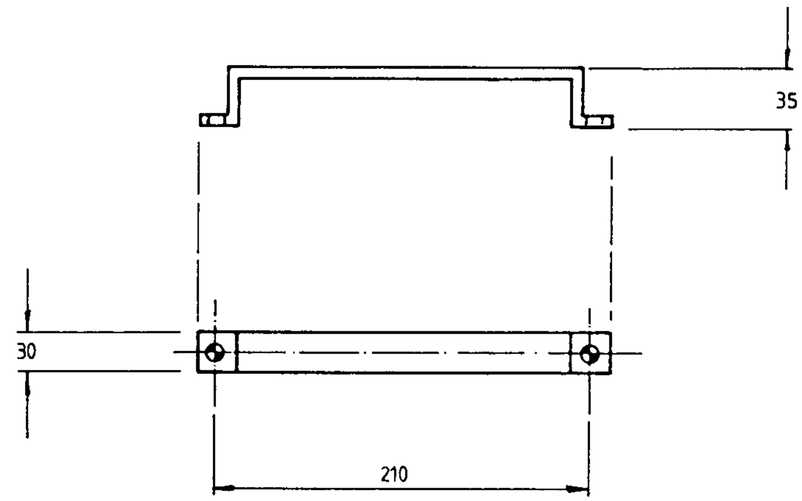

NEUTRAL BAR

NOT USED FOR NEW INSTALLATIONS

MAINTANENCE PURPOSES ONLY

ITEM Nº	Nº REQ'D	DESCRIPTION	REMARKS
2	1	Neutral bar	
1	1	Mounting board – Zelemite or similar.	

MATERIAL LIST.

Nº	AMENDMENT	DATE	INIT.	APP'D
2	TITLE & Drg NUMBER CHANGED	5/88		
1	GENERAL REVISION	1.85	T.R.	

POWER AND WATER AUTHORITY

POWER DIRECTORATE

DES D. BIRKETT

DRN S. JACKSON.

CKD

APPD

ISSUED 4.2.86

DRAFTING STANDARD TO A.S. 1100

ALL DIM. IN mm

N T STANDARD DRAWING

TITLE TRANSFORMERS
SINGLE PHASE
EXTERNAL MOUNTING BOARD DETAILS

A3

DRAWING NUMBER S2-1-6-4

SCALE NOT TO SCALE

SHEET ——

2 AMD'T.