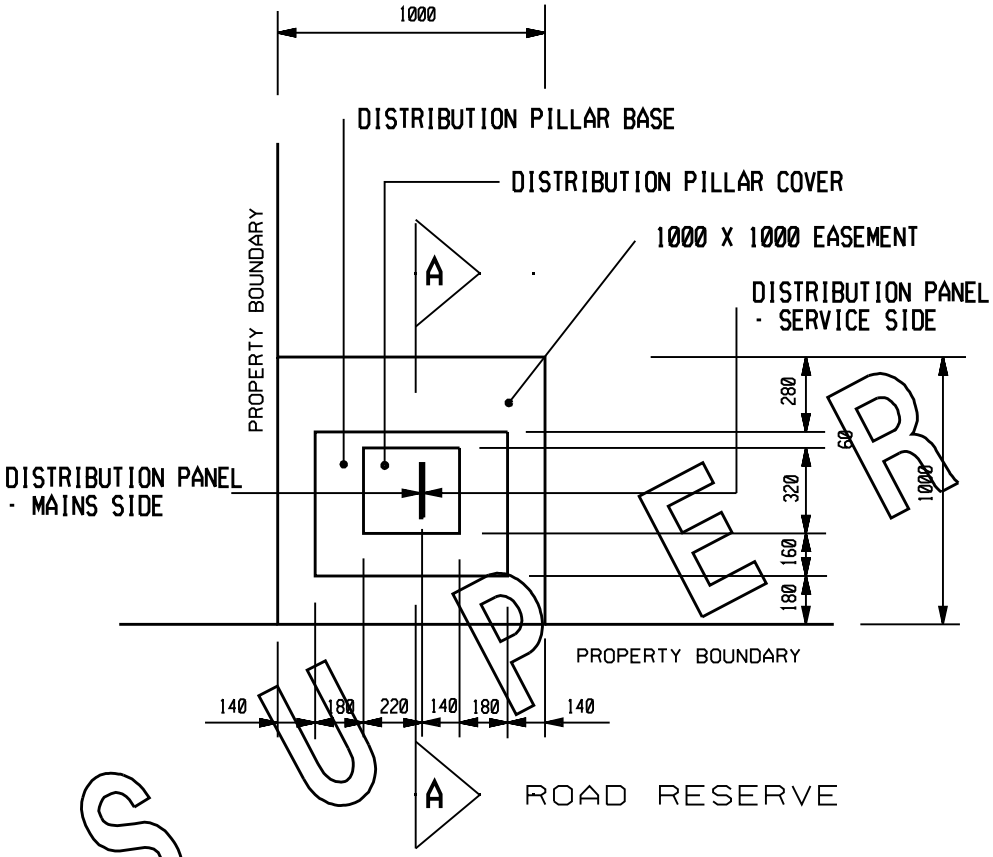

PLAN

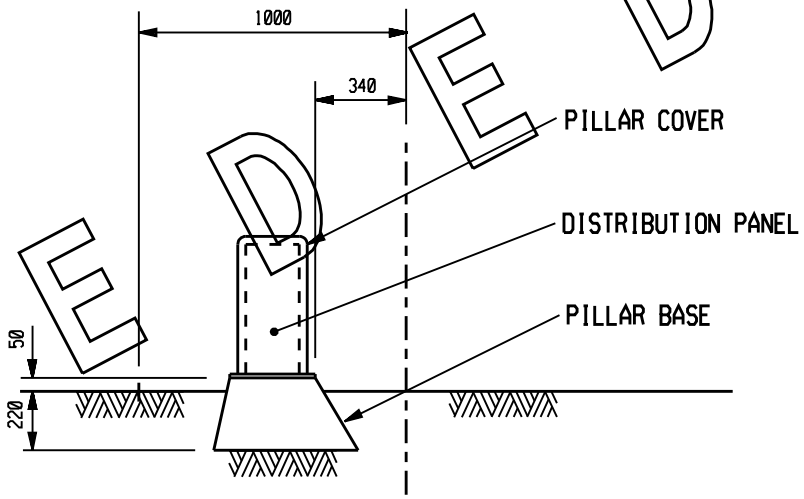

SECTION A-A

SUPERSEDED

NO	DESCRIPTION	DRN	DATE	CKD	APPD
	AMENDMENTS				

PowerWater
NORTHERN TERRITORY

DES	N.F.S.
DRN	gmck
CKD	N.S
APPD	B.T.K.
SCALE	1:20
ISSUED	NOV'92
ALL DIM. IN mm	
DRAFTING STANDARD TO A.S.1100	

POWER STANDARD DRAWING

DISTRIBUTION PILLARS
RESIDENTIAL
LV PILLAR ORIENTATION

A3

DRAWING NUMBER S02-02-03-05

0 AMDT

CAD PRODUCT - DO NOT AMEND MANUALLY