3RD ANGLE — DO NOT SCALE — REPORT ANY ERRORS, OMISSIONS TO DRAFTING OFFICE

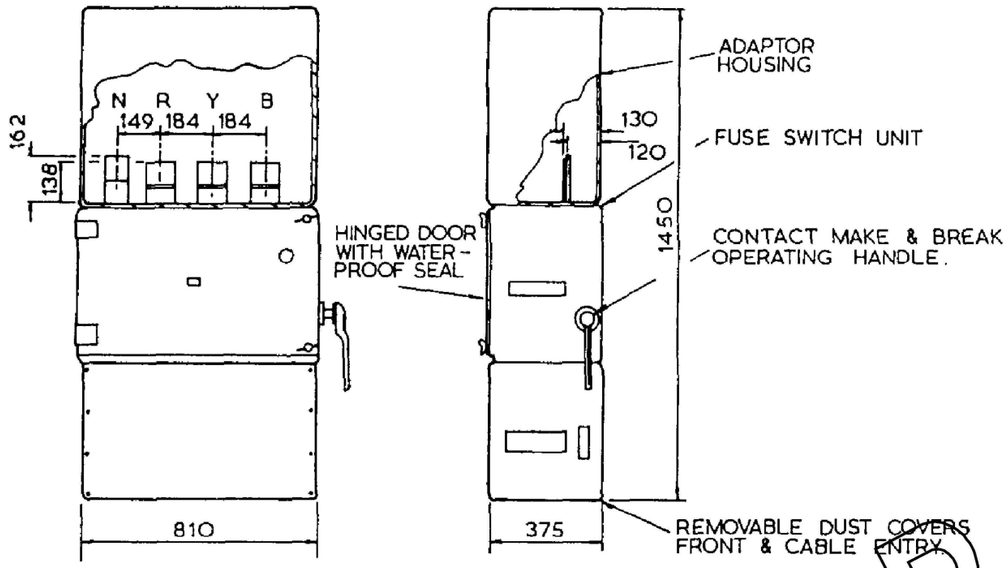

1600A COMBINATION FUSE SWITCH

NOTE - BUSBARS MUST BE CAPABLE OF BEING USED, WITHOUT MODIFICATION ON STANDARD 1000A G.E.C. BUS CHAMBERS.

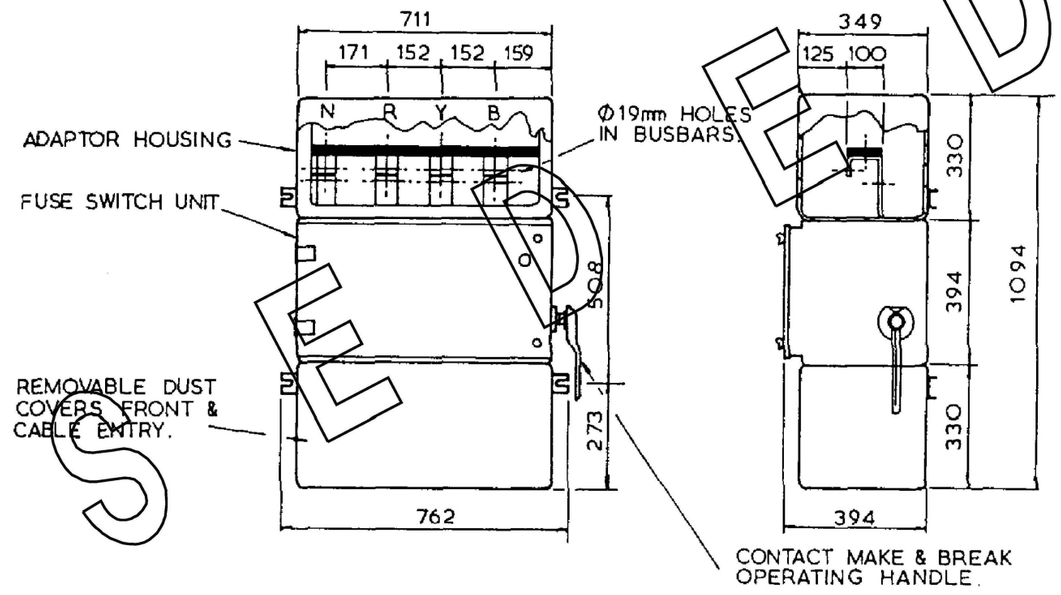

800A COMBINATION FUSE SWITCH

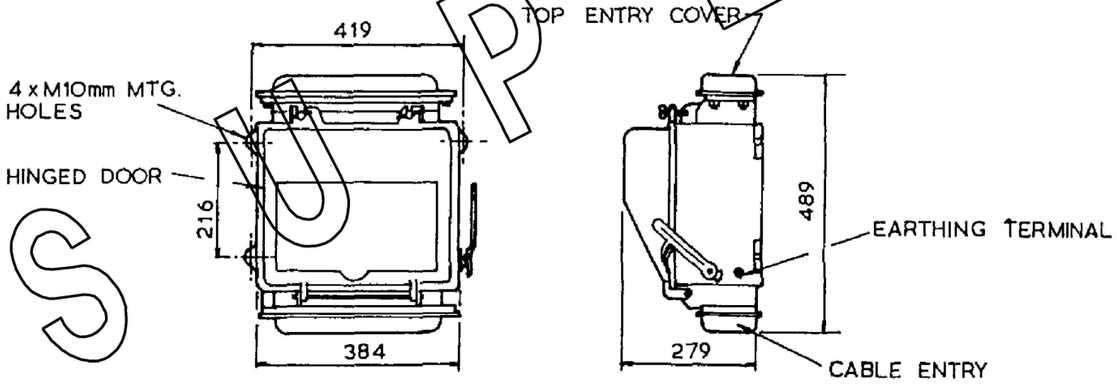

300A COMBINATION FUSE SWITCH

TECHNICAL DATA:

MAX. OPERATING VOLTAGE — 440V.
BUSBAR ARRANGEMENT — TRIPLE POLE & NEUTRAL.
RUPTURE CAPACITY — 50 MVA.

MATERIAL:

CABINET - 1600A & 800A, MILD STEEL
- 300 A, CAST IRON.
FINISH - 1600A, 800A & 300A, PAINTED GREY.

APPLICATION - REPLACEMENTS ONLY.

SUPERSEDED

NO	DESCRIPTION	DRN	DATE	CKD	APPD
5	TITLEBLOCK & DRAWING NUMBER FORMATTED	K.T.	APR'19	C.C.	C.C.
4	TITLE & DRAWING NUMBER CHANGED	-	MAY'88	-	-
3	INDEX NUMBER ALTERED	-	MAR'85	-	-
2	REDRAWN & REDESIGNED	-	JAN'85	-	-

AMENDMENTS

PowerWater
NORTHERN TERRITORY

DES	R.HAIGH
DRN	R.HAIGH
CKD	-
APPD	-
SCALE	-
ISSUED	4/02/86
ALL DIM. IN mm	
DRAFTING STANDARD TO A.S.1100	

POWER STANDARD DRAWING

FUSES & SWITCHGEAR COMBINATION FUSE SWITCH 300A, 800A & 1600A

A3

DRAWING NUMBER S02-01-04-15

5 AMDT

CAD PRODUCT - DO NOT AMEND MANUALLY